Building Biology Products
and services

Shielded lamps



A shielded table lamp with a satin-matt opal glass shade and a beechwood base.

- The character of this table lamp is defined by soft light, clean lines and the warm glow of beech wood. The streamlined cylinder is made of satin-matt opal glass and rests on a solid wooden base, giving the lamp a calm and elegant appearance.

  The opal glass evenly diffuses light across the entire surface of the cylinder, creating softly diffused, low-glare illumination. Whether placed on a sideboard or bedside table, or used as a subtle accent light in the living area, this table lamp always helps to create a relaxed atmosphere.

  Behind the design lies a well-thought-out electrical construction. The E14 socket, with its shielding stainless steel shade cage, and the shielded connection cable with ground wire form a continuous shielding system right through to the mains plug. The integrated pull switch ensures convenient operation.
- The elegant glass cylinder is made from satin-finish opal glass.
- The light distribution is balanced, gently soft and low-glare.
- The flat lamp base is made from solid beech wood.
- E14 socket with a shielding stainless steel shade cage.
- A consistent shielding design from the light source right through to the mains plug.
- Shielded power cord with ground wire (Protection Class I)
- Built-in pull switch for easy switching on and off.
- For replaceable LED bulbs.

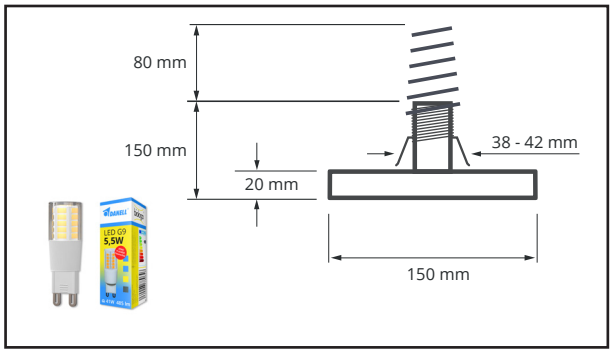

Order-No.: 318
Short-Desc.: MONACO

Shielded lamps

Table lamp MONACO

Technical data

Base (Nepal):	Oiled beech wood base, natural wood finish
Opal glass (Verona):	Cylinder, silk matt, white
Betriebsspannung:	230 VAC / 50 Hz
Dimensions:	see sketch
Cable:	approx. 200 cm, 3 x 0.75 mm², shielded
Plug:	CEE 7/7; EU/FR; Typ: E/F
Lamp holder size:	E14
Switch:	Shielded pull switch
Protection class:	1 (with protective ground)
Shielding against alternating electric fields:	Light fitting and internal base components made of metal
Shielding cage:	1 x stainless steel spiral, E14
Testing: Measurements based on the test conditions of TCO Certified, Generation 10, Volume I (5 Hz–2 kHz). Measurement distance 30 cm.	In all test procedures, levels were below the limit by a factor of 20 or more; individually 100 per cent compliant

Scope of delivery

Opal glass cylinder, E14 lamp base, E14-G9 adapter, G9 5.5 W LED bulb (485 lm), instruction manual





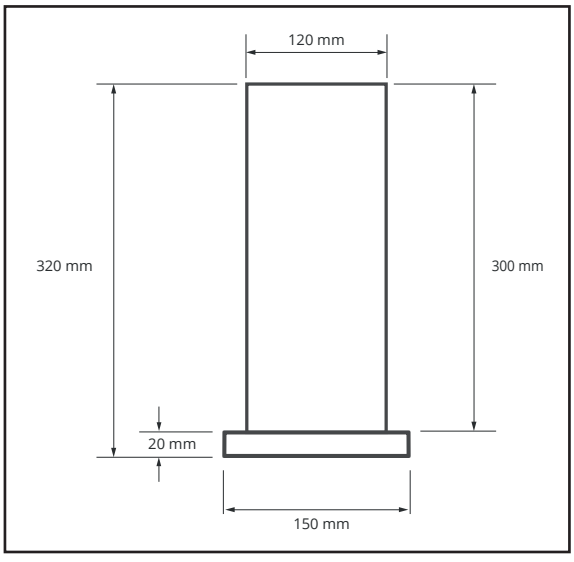

Biologa Danell GmbH • Hauptstraße 27 • 72336 Balingen • GERMANY • +49 7433 955 7172 • info@biologadanell.com • www.biologadanell.com