Building Biology Products
and services

Shielded lamps



Shielded lamps

Floor lamp AMSTERDAM

Technical data

colour:	silver, brushed steel, Shade aluminium brushed
cable length:	ca. 280 cm black
mains connection shielded:	right-angle earthing contact plug DIN 49441
switch:	1-pole, shielded ON / OFF
operating voltage:	230 VAC / 50 Hz
dimensions:	see drawing
light source: light source base:	LED-G9-5,5 W 485 lm G9 - LED max. 10 Watt
protection class:	1 (with grounding wire)
shielding alternating electric field:	shielded mains cable (aluminium tape, two-wire, shielding basket)
shielding basket:	spiral stainless steel
shielding alternating magnetic field:	number of beats 10 (individual wires twisted together ten times per metre)
test according to:	TCO'99 (MPR II, DIN EN 50279) limits undercut by a factor of 20 and more for all measurement methods, undercut by a factor of 20 and more, individually by 100

Scope of delivery

lamp with one G9-LED-5,5 and shielding basket pre-mounted, operating instructions

- The Amsterdam floor lamp has a modern and timeless design and integrates beautifully into any room. It is designed with clear, modern lines in brushed steel and aluminium parts. It is easy to switch on / off using a switch positioned near the light shade of the lamp. It creates a beautiful look and adds atmosphere to your rooms.

  This floor lamp is very suitable and can be used wherever you want. A pinpoint light for working or a cosy light for ambient or background lighting, e. g. as a lamp on a sideboard or as indirect lighting when watching TV.

  Special feature: The floor lamp is very well shielded, making it a very low-radiation lamp, i. e. very little electrosmog, as it is fully shielded from the EU-plug to the lamp head.
- shielded floor lamp made of brushed steel and brushed aluminium elements
- flex connections, rotatable in all directions
- elegant table lamp for office and living rooms
- completely shielded from light source to mains plug incl. shielding basket and Biologa Danell LED G9









Order-no.: 57
Short-desc.: AMSTERDAM FLOOR LAMP

Shielding effect in comparison (applies to all Biologa Danell lamps):

An unshielded luminaire (protection class 2) with an unshielded connecting cable produces an alternating electric field of 100.0 to 160.0 V/m (building biology recommended guide value 10.0 V/m).

The shielded luminaire (protection class 1) with appropriate construction produces only an alternating electric field of a minimum of 0.4 to 0.6 V/m.
The shielding is checked according to the specifications, frequency bands and measuring distances of the recognised screen standards (for low-radiation screens / monitors): TCO'99, Band I (MPR II) and DIN EN 50279 (measuring distance 30 cm).

Biologa Danell GmbH • Hauptstraße 27 • 72336 Balingen • GERMANY • +49 7433 955 7172 • info@biologadanell.com • www.biologadanell.com

Shielded lamps

Floor lamp AMSTERDAM

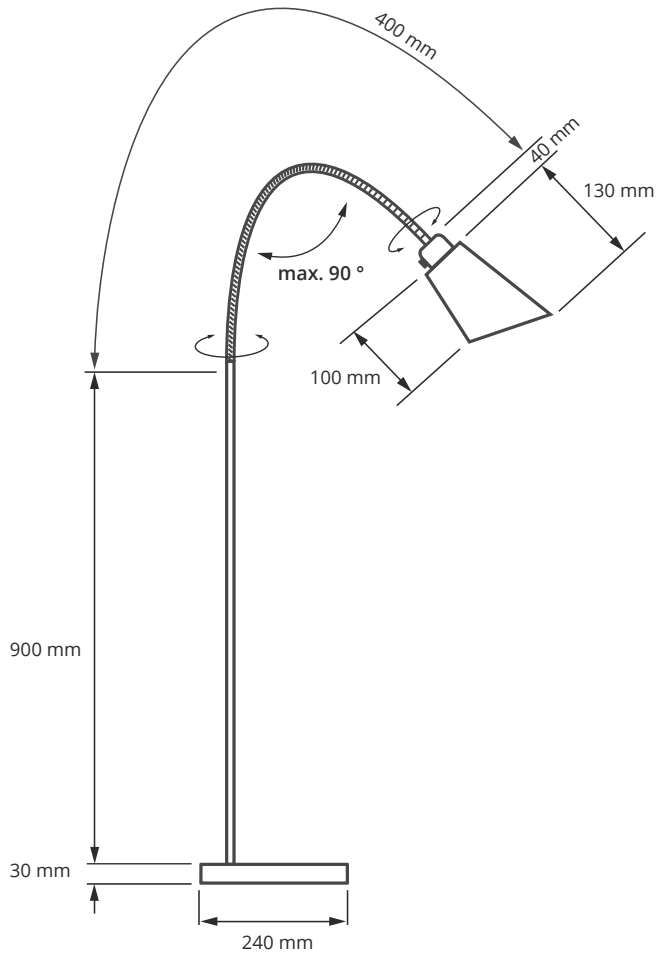

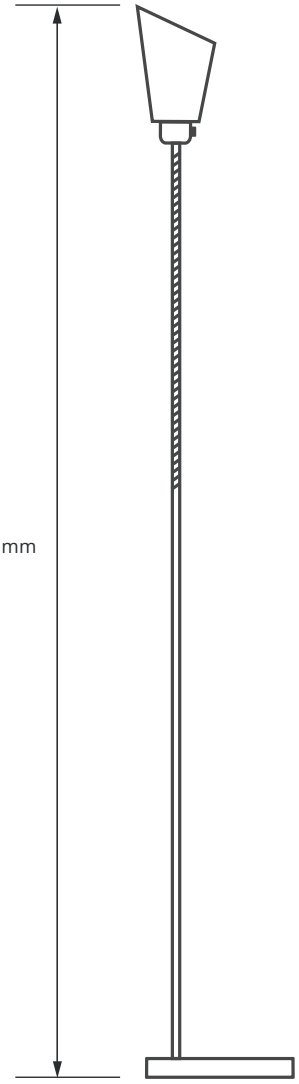





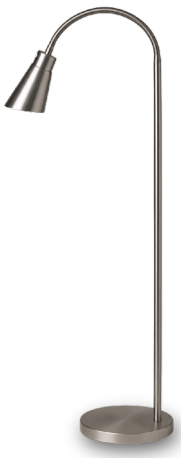

Order-no.: 57
Short-desc.: AMSTERDAM FLOOR LAMP

Biologa Danell GmbH • Hauptstraße 27 • 72336 Balingen • GERMANY • +49 7433 955 7172 • info@biologadanell.com • www.biologadanell.com