Building Biology Products
and services

Shielded lamps

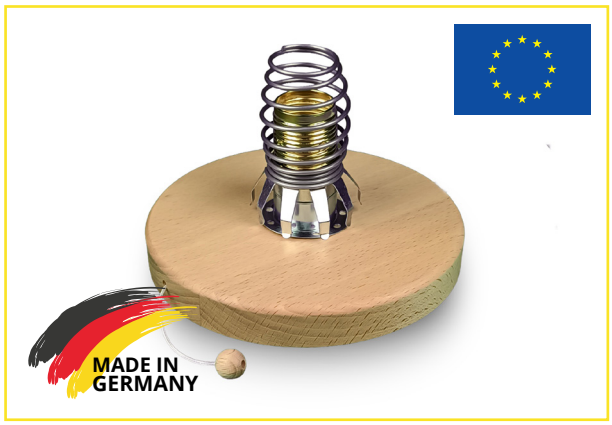

Product information

- The Nepal shielded lamp base combines natural materials with an optimised electrical design. The solid beechwood base can be paired with either the Verona opal glass cylinder or a suitable salt crystal.

  The Verona cylindrical glass shade (Monaco lamp) is a timelessly simple table lamp. The frosted opal glass evenly diffuses the light, creating a soft, pleasant glow.

  As an alternative, existing salt crystals with a suitable mounting can be reused. Those with a bore diameter of 38–42 mm and a bore depth of at least 80 mm are suitable.
- Shielded lamp base made of beech wood
- This is particularly suitable for Verona opal glass cylinders or salt crystals weighing up to 5 kg. The drilling depth should be at least 80 mm.
- E14 socket with a protective stainless steel shade cage
- It is fully shielded from the light source all the way through to the mains plug.
- Shielded power cable with a protective conductor (protection class 1).
- Built-in pull switch for easy switching on and off.
- A solid beech wood base provides stability.
- For lampshades with a bore diameter between 38 and 42 mm.

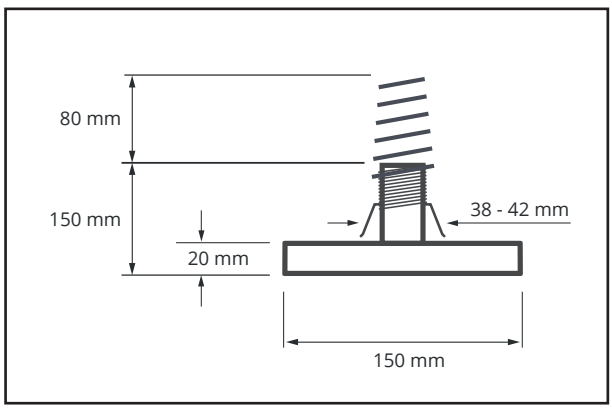

Order-No.: 220
Short-Desc.: BASE NEPAL

Shielded lamps

Lamp base NEPAL

Technical data

Colour:	Oiled beech wood, white cable
Operating voltage:	230 VAC / 50 Hz
Dimensions:	siehe Skizze
Cable:	ca. 200 cm, 3 x 0,75 mm² geschirmt
Plug:	CEE 7/7; EU/FR; Typ: E/F
Socket type:	E14
Switch:	Shielded pull switch
Protection class:	1 (with protective conductor)
Shielding alternating electric fields:	Light fitting, and metal internal base components
Shileding basket:	1 x stainless steel spiral E14
Test: Measurement carried out in accordance with the measurement conditions set out in TCO Certified, Generation 10, Volume I (5 Hz–2 kHz). Measurement distance: 30 cm.	All measurement procedures were below the threshold by a factor of 20 or more, individually by 100 per cent

Scope of delivery

E14 lamp base, instruction manual

Examples of use

With rock salt or a Verona cylindrical glass.











Further information at www.biologadanell.com

Biologa Danell GmbH • Hauptstraße 27 • 72336 Balingen • GERMANY • +49 7433 955 7172 • info@biologadanell.com • www.biologadanell.com