Building Biology Products
and services

Shielded lamps and connection cables

A step to healthy living and working

Why shielding against electric and magnetic fields?

Electric and magnetic fields occur everywhere. Their origin can be both natural and artificial. Artificially generated fields in particular are becoming more and more important.

The use of electrical and electronic devices in the living and working environment is constantly increasing.

The influence of artificially generated fields on the human organism has not yet been conclusively researched, but there is increasing knowledge that people react sensitive to exposure to electric and/or magnetic fields.

Electric fields are basically caused by every electric line, even if a connected device is not switched on. This field can be almost completely eliminated without having to sacrifice comfort by using shielded components.

Magnetic fields only occur when a device / lamp is also switched on and thus a current flows. Magnetic fields can also be significantly reduced by the appropriate design of a lamp.

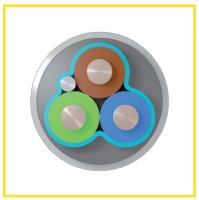

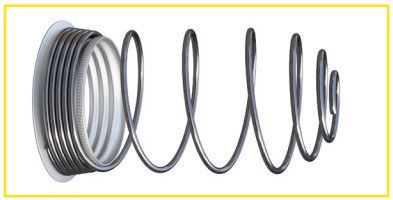

Practical construction of shielded lamps

Our shielded lamps basically consist of a three-pole connecting cable (except ceiling lamps), a metal lamp housing of protection class I and a shielding basket for the light source.

While conventional mains cables are usually designed with two poles and a Euro plug, our cables have three poles (with a protective conductor, thus increasing safety) and are equipped with a metallic sheathing of the cores as a shield.

Our lamps have a metallic housing (or inner housing in the case of lamps made of wood) which, unlike other materials such as plastic or wood, also shields against the alternating electric field.

Lamp socket and light source (according to building biology recommendations) were integrated into the shielded system by means of a shielding basket, as considerable alternating electric fields can be measured here as well without shielding.

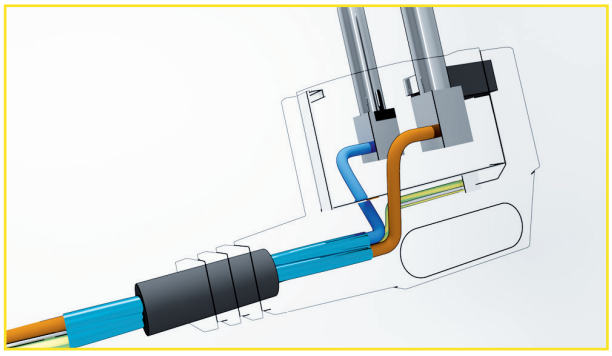

Shielding effect in comparison to standard lamps

An unshielded lamp (protection class 2) with an unshielded connecting cable produces an alternating electric field of 100.0 to 160.0 V/m (building biology recommended guide value 10.0 V/m). The shielded lamp (protection class 1) with appropriate construction produces only an alternating electric field of a minimum of 0.4 to 0.6 V/m.

The shielding is checked according to the specifications, frequency bands and measuring distances of the recognised screen standards (for low-radiation screens / monitors):
TCO'99, Band I (MPR II) and DIN EN 50279 (measuring distance 30 cm).

What else can you do to reduce electromagnetic radiation?

- Only use shielded connection cables and socket strips for your other devices!
- Never leave appliances switched on or in stand-by mode for longer than necessary. Always disconnect the appropriate mains plug or switch off two-pole.
- Avoid electrical appliances in your bedrooms and living rooms or place them as far away from you as possible.

All product information on shielded cables, connecting cables, socket strips and lamp systems can be found under

www.biologadanell.com.

Further information at www.biologadanell.com

EN-318-V1.0.0-131026

Biologa Danell GmbH • Hauptstraße 27 • 72336 Balingen • GERMANY • +49 7433 955 7172 • info@biologadanell.com • www.biologadanell.com

Table lamp Monaco - Manual

MONACO table lamp - Item-No. 318



Safety instructions

All electrical work, including work on electrical appliances and installations, must be carried out and inspected by a qualified electrician, or under their supervision!

Only use your lamp indoors, in a dry environment and at normal room temperature. Do not use it outdoors!

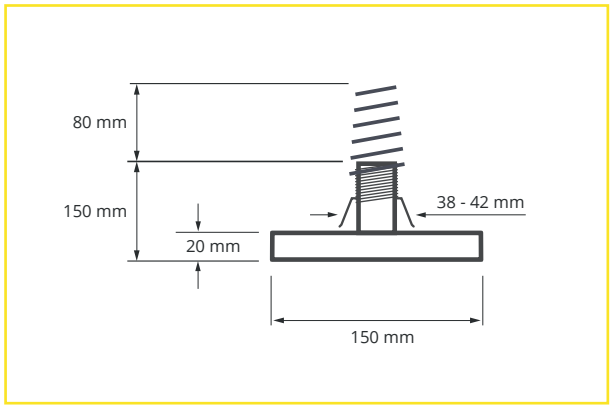

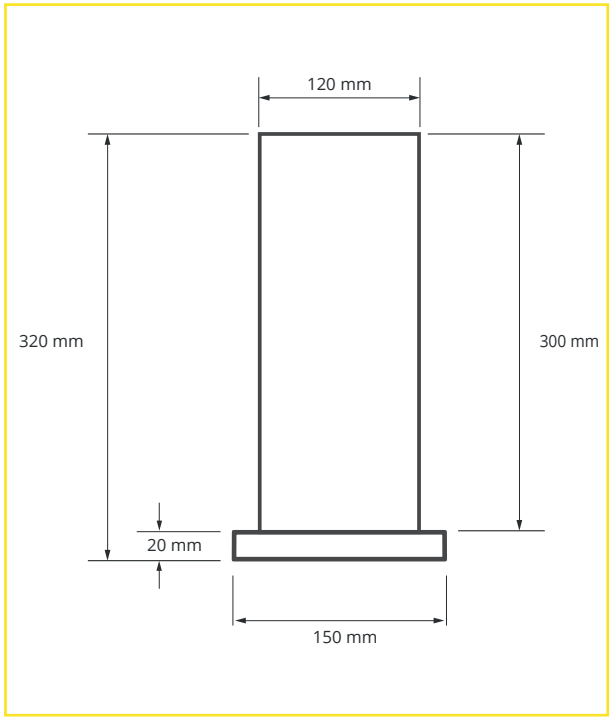



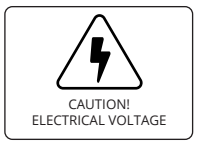



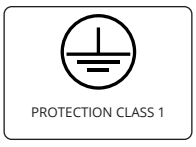

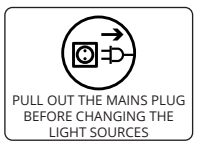







EN-318-V1.0.0-131026

Biologa Danell GmbH • Hauptstraße 27 • 72336 Balingen • GERMANY • +49 7433 955 7172 • info@biologadanell.com • www.biologadanell.com

Table lamp Monaco - Manual

MONACO table lamp - Item-No. 318

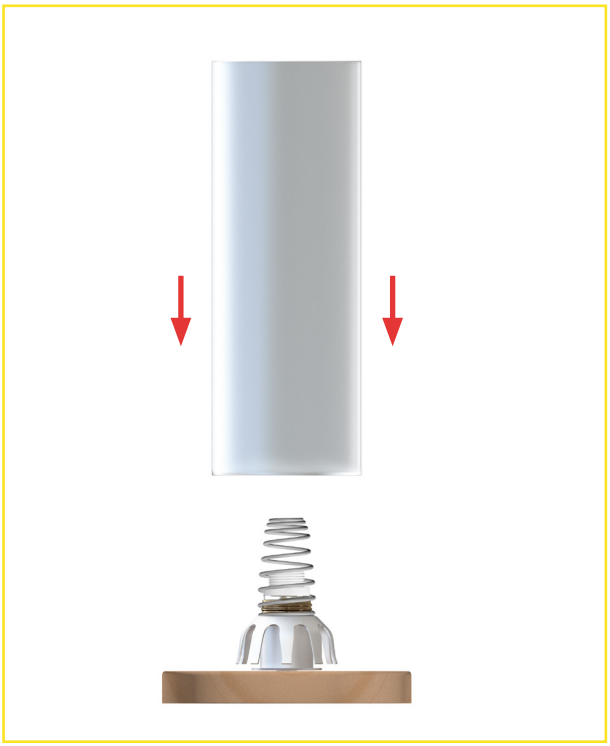

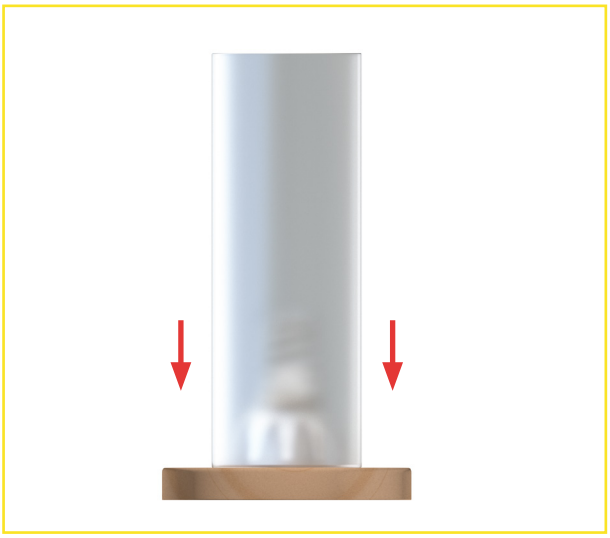

Fitting the lampshade

1. Carefully press the lampshade down onto the clamping claw from above.
2. To remove the lampshade, slowly and carefully pull it straight up.

If necessary, readjust the clamping tabs on the retaining ring. This will allow the shade to slide into place or be removed again without too much resistance.

First use

1. Remove the packaging from the base and lampshade.
   (The lamp comes in two packages.)
2. Insert the bulb into the socket.
3. Attach the shielding basket to the socket by screwing it on clockwise.
4. Attach the lampshade.
5. Connect the cable to the power socket.
6. Use the pull switch to switch it on and off.

If the shielding basket does not quite cover the light bulb, it can be stretched to fit.

Changing the light bulb.

Important:
always unplug the lamp from the mains before carrying out any work on it. If you are using a G9 high-voltage halogen bulb, make sure that it has cooled down first.

You don‘t need to take the lampshade off the base to change the bulb!

1. Press the shield basket downwards from above.
2. Insert a bulb or replace a faulty one. Then, allow the lampshade to rise slowly under its own weight.

If you are using a high-voltage light bulb, make sure that its maximum power rating is no more than 25W!

There is no limit on LED light bulbs.

Fitting/changing a light bulb

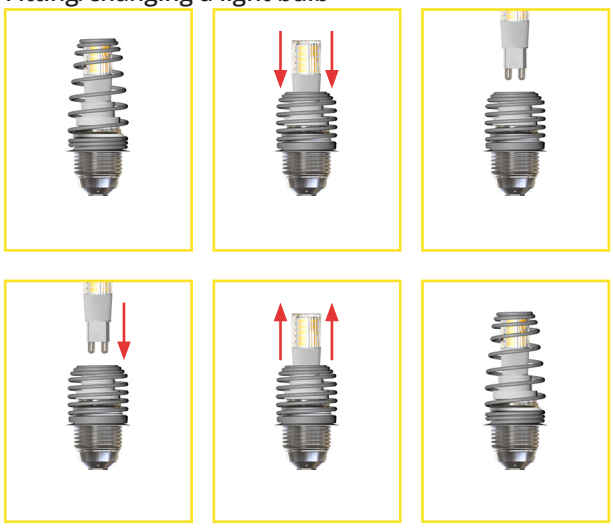

If you need to replace the shielding basket, turn it clockwise and pull it upwards!

Please note that if you deliberately dismantle the entire fitting, the warranty will be invalidated.

Biologa Danell GmbH • Hauptstraße 27 • 72336 Balingen • GERMANY • +49 7433 955 7172 • info@biologadanell.com • www.biologadanell.com