Shielded lamps

Shielded lamps

Table lamp AMSTERDAM

- The Amsterdam table lamp has a modern and endless design and integrates beautifully into any room. It is designed with clear, modern lines in brushed steel and aluminium parts. It is easy to switch on or off using an switch on the base of the lamp. It creates a beautiful look and adds atmosphere to your rooms.

  This table lamp is very suitable and can be used wherever you want. A pinpoint light for working or a cosy light for ambient or background lighting, e. g. as a lamp on a sideboard or as indirect lighting when watching TV.

  Special feature: The table lamp is very well shielded, making it a very low-radiation lamp, i. e. very little electrosmog, as it is fully shielded from the EU-plug to the lamp head.

- shielded table lamp made of brushed steel and brushed aluminium elements
- Tube connections, rotatable in all directions
- elegant table lamp for office and living rooms
- completely shielded from light source to mains plug incl. shielding basket and Biologa Danell LED G9

Order-no.: 400058
Short-desc.: AMSTERDAM TABLE

Technical data

colour:	silver, brushed steel, Shade aluminium brushed
cable length:	ca. 280 cm black
mains connection shielded:	right-angle earthing contact plug DIN 49441
switch:	1-pole, shielded ON / OFF switch in socket
operating voltage:	230 VAC / 50 Hz
dimensions:	show drawing
light source:	E14, LED-G9-5,5 W 485 lm - max. 10 Watt
protection class:	1 (with grounding wire)
shielding alternating electric field:	shielded mains cable (aluminium tape, two-wire, shielding basket)
shielding basket:	spiral stainless steel with mounting ring E14
shielding alternating magnetic field:	number of beats 10 (individual wires twisted together ten times per metre)
test according to:	TCO'99 (MPR II, DIN EN 50279) limits undercut by a factor of 20 and more for all measurement methods, undercut by a factor of 20 and more, individually by 100

Scope of delivery

lamp with one G9-LED-5,5 and shielding basket

operating instructions

Shielding effect in comparison (applies to all Biologa Danell lamps):

An unshielded luminaire (protection class 2) with an unshielded connecting cable produces an alternating electric field of 100.0 to 160.0 V/m (building biology recommended guide value 10.0 V/m).

The shielded luminaire (protection class 1) with appropriate construction produces only an alternating electric field of a minimum of 0.4 to 0.6 V/m.
The shielding is checked according to the specifications, frequency bands and measuring distances of the recognised screen standards (for low-radiation screens / monitors): TCO'99, Band I (MPR II) and DIN EN 50279 (measuring distance 30 cm).

Biologa Danell GmbH • Hauptstraße 27 • 72336 Balingen • GERMANY • +49 7433 955 7172 • info@biologadanell.com • www.biologadanell.com

Table lamp AMSTERDAM

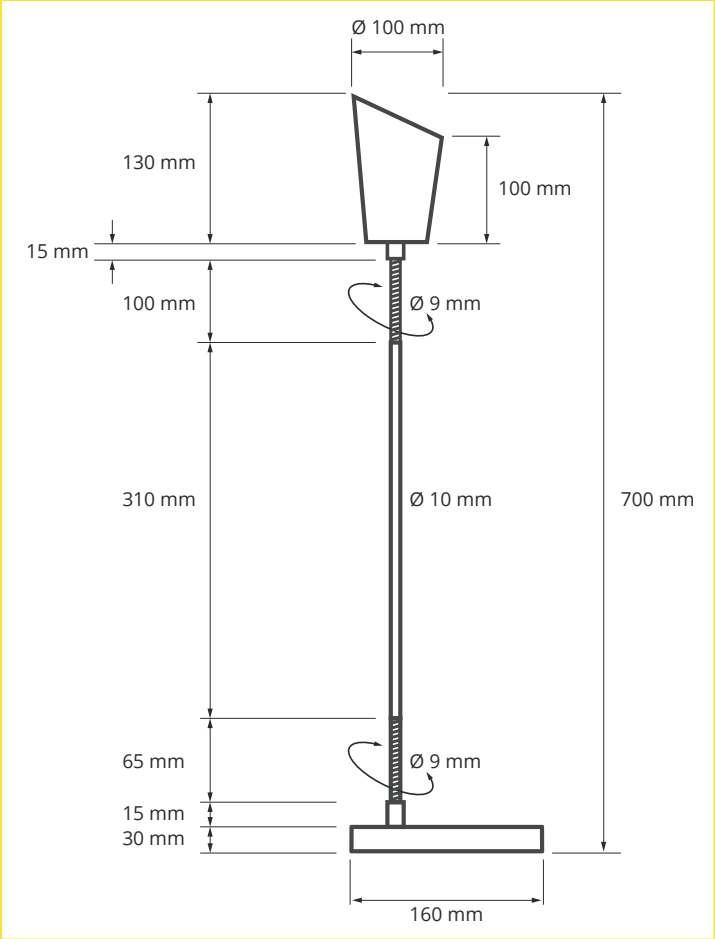

Order-no.: 400058
Short-desc.: AMSTERDAM TABLE

Biologa Danell GmbH • Hauptstraße 27 • 72336 Balingen • GERMANY • +49 7433 955 7172 • info@biologadanell.com • www.biologadanell.com